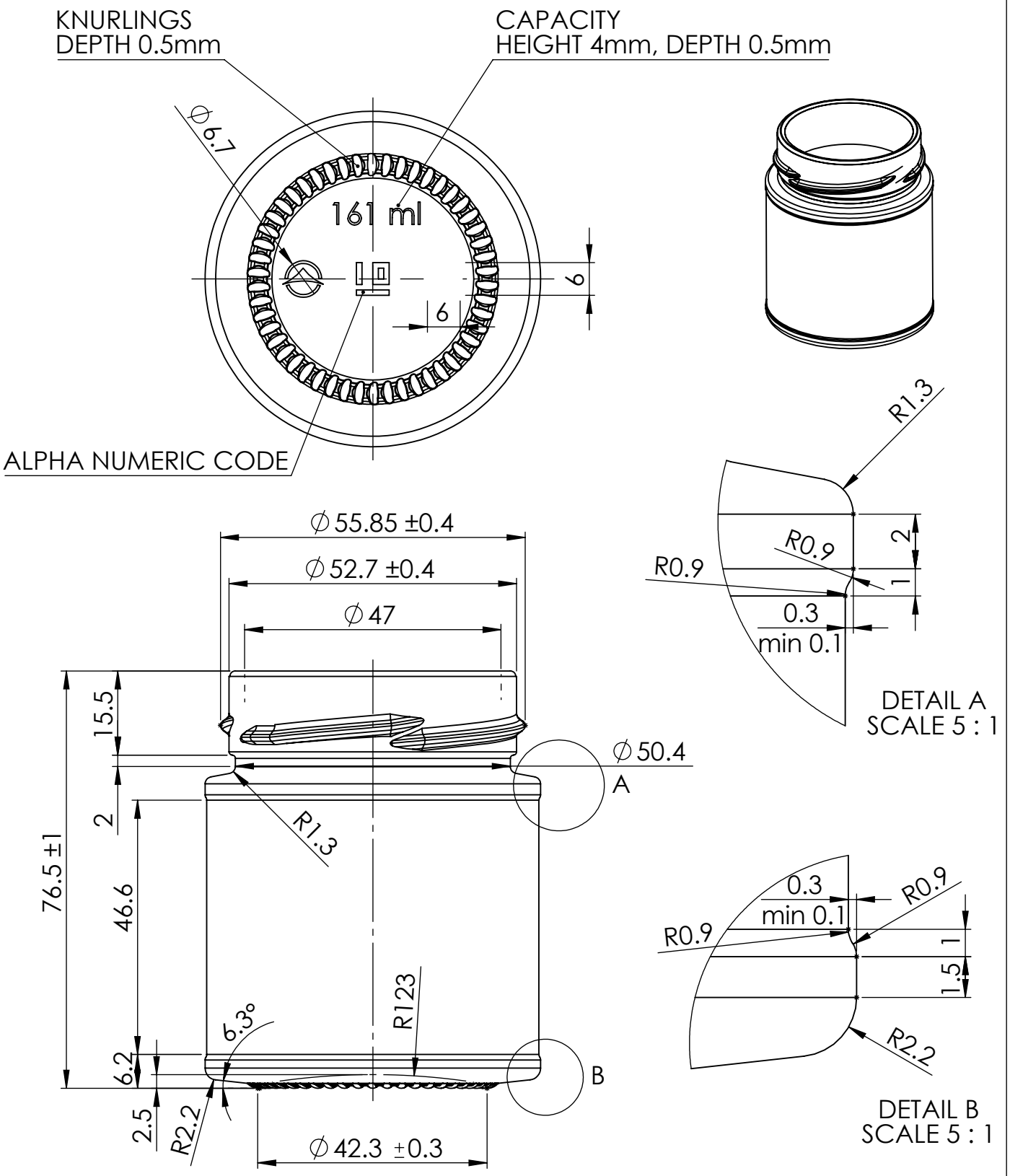

5	
4	
3	
2	
1	

-----REVISIONS-----

SHEET 1/1	PRODUCT NAME:	JAR KORA 161ml.			
A4	ИЗДЕЛИЕ:	БУРКАН КОРА 161ml.			
SCALE	Drawing No: 120106_JAR_KORA_161ml_TO58_DEEP		FINISH TYPE: TO58 DEEP - FD136A		
1:1	DRAWN:	K.IVANOV	25/3/24	PRODUCT CODE:	DATE
	CHECKED:	KAMENOV	25/3/24	120106	25.03.2024

WEIGHT	120 ± 5 g
NOMINAL CAPACITY	ml
BRIMFUL CAPACITY	161 ± 7 ml
COLOR	FLINT
FILLING LINE	mm
TIP ANGLE	
HEADSPACE	%
CARBONATION	NO
RETURNABLE	NO
CUSTOMER	ADM VETRO
PRODUCTION PROCESS	PRESS&BLOW

REV.