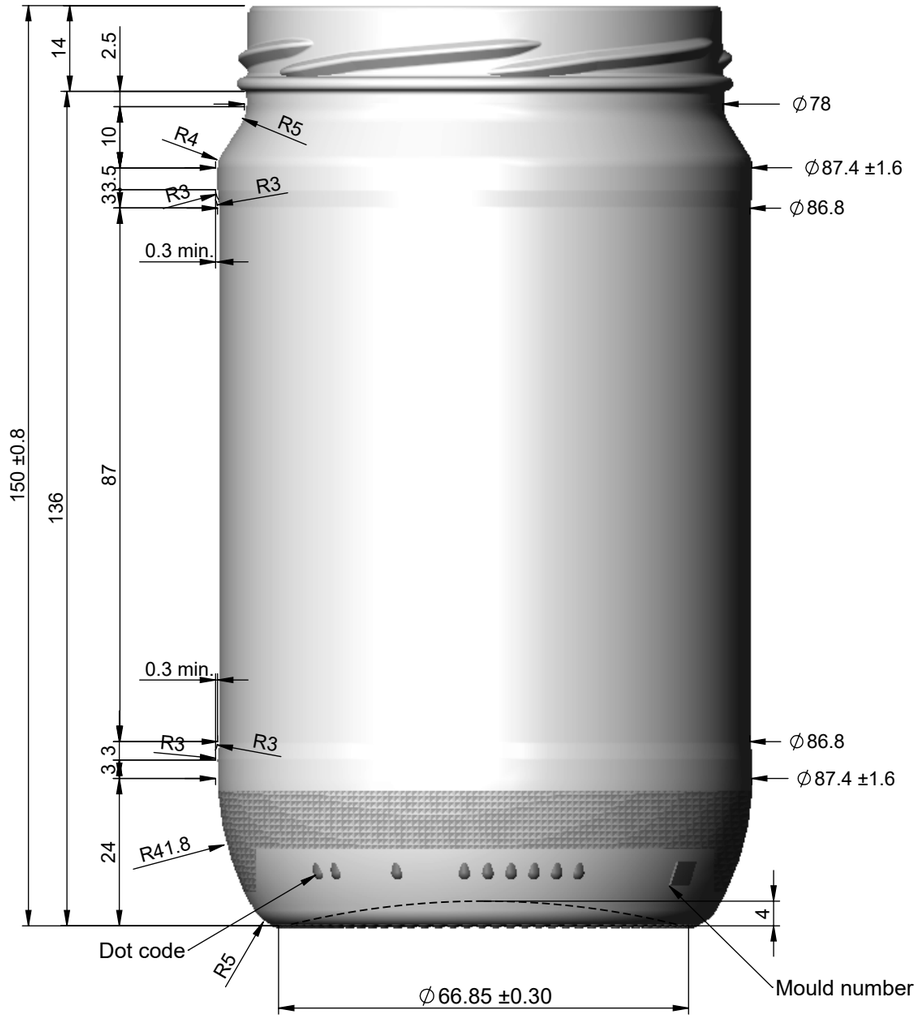

FRONT VIEW

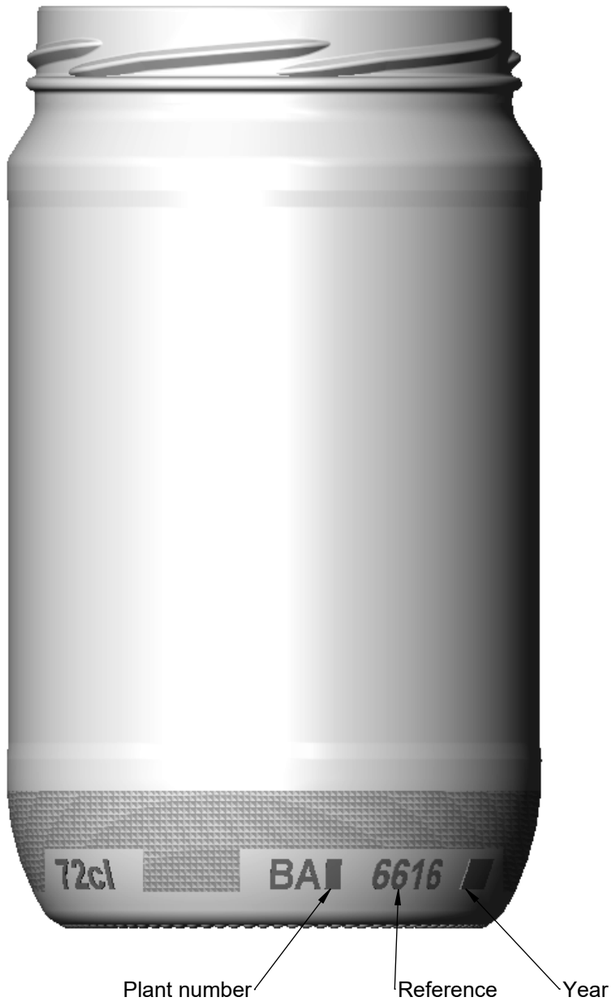

BACK VIEW

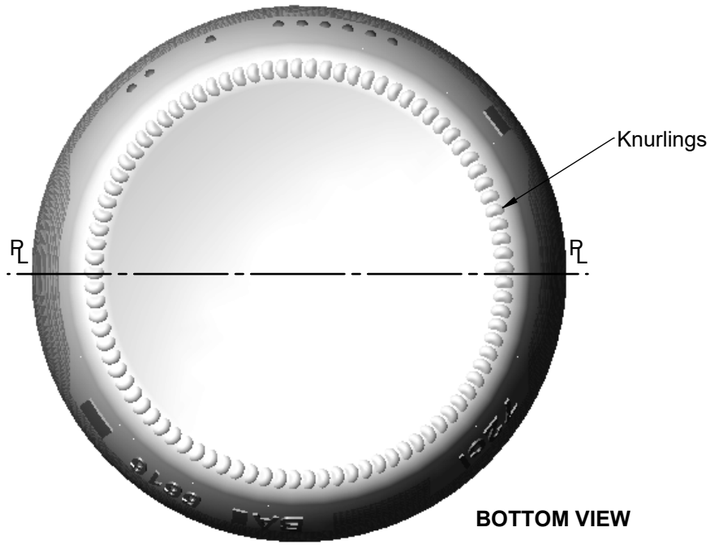

BOTTOM VIEW

GLASS WEIGHT			**Aprox. 290** g
CAPACITY AT FILL LINE			ml
BRIMFUL CAPACITY			**720 ± 15** ml
MAX. CO_2			g/l
HEADSPACE W/O CORK			%
HEADSPACE W/ CORK	Ø	H	%
TIP ANGLE	**24** º	CG HT	**75** mm

STACKABLE	X	NON STACKABLE	
REFILLABLE		ONE WAY	X

FINISH
T205
TO 82 REG W_BEAD 78x16

REVISION	DESCRIPTION	DATE
A	**Layout in EN**	**14-10-2020**
-	**Was project 143/11**	**15-03-2012**

BA **PRODUCT DEVELOPMENT**

DATE	DRAWN	APPROVAL
14/10/2020	**R.Arrais**	**T.Abrantes**
DRAWING	REV.	SCALE ON ORIGINAL
6616T205	**A**	**1:1** A3L

DESIGNATION
720 normalizé

DIMENSIONS WITHOUT TOLERANCE EXCLUSIVELY FOR MOLD CONSTRUCTION